ASSEMBLY INSTRUCTIONS

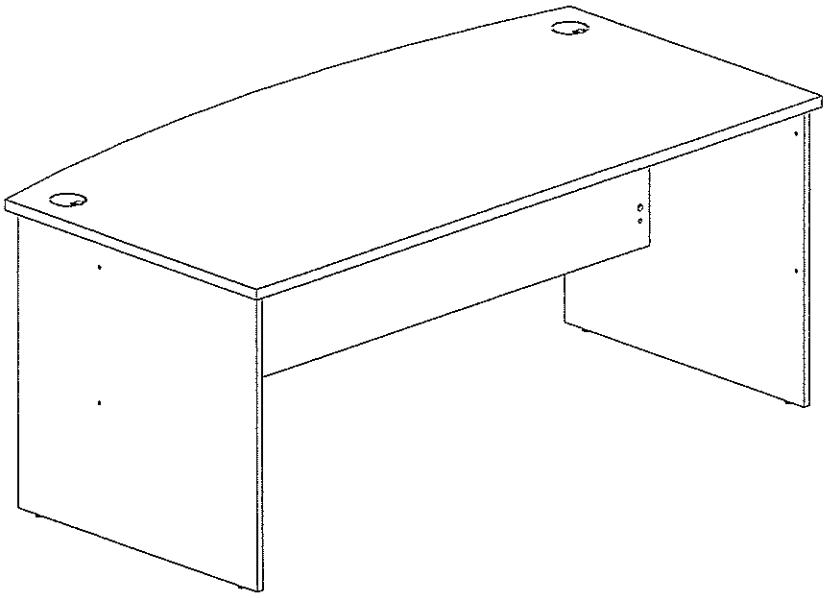

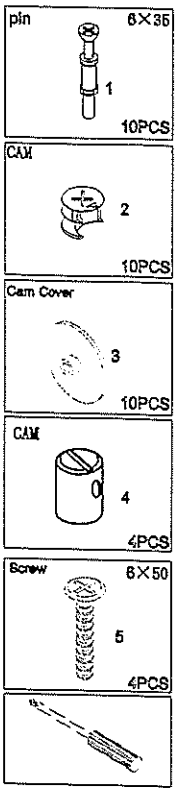

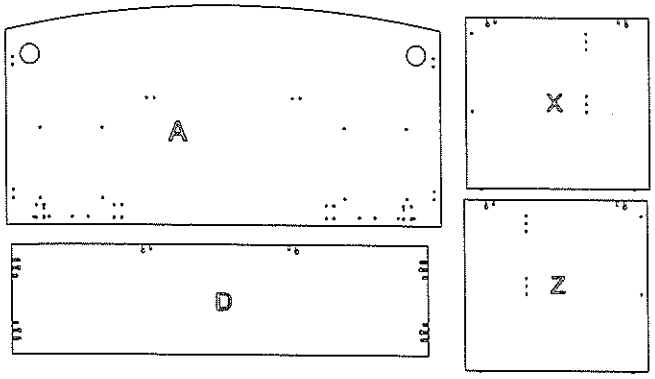

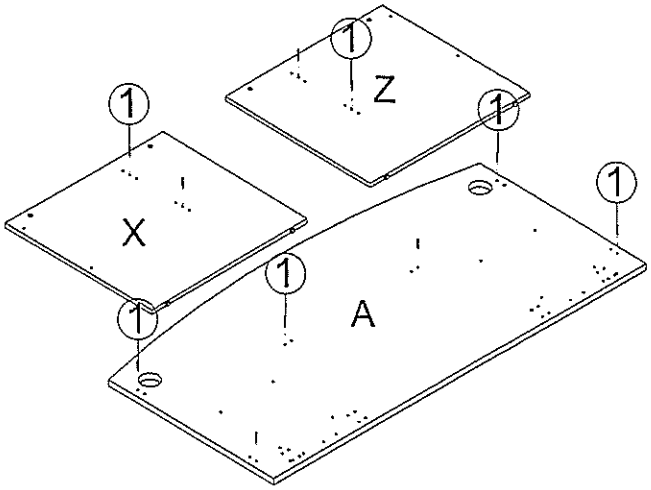

1

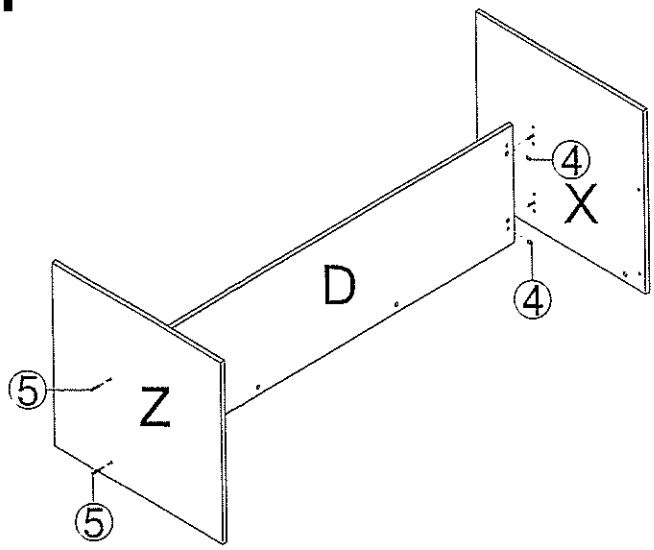
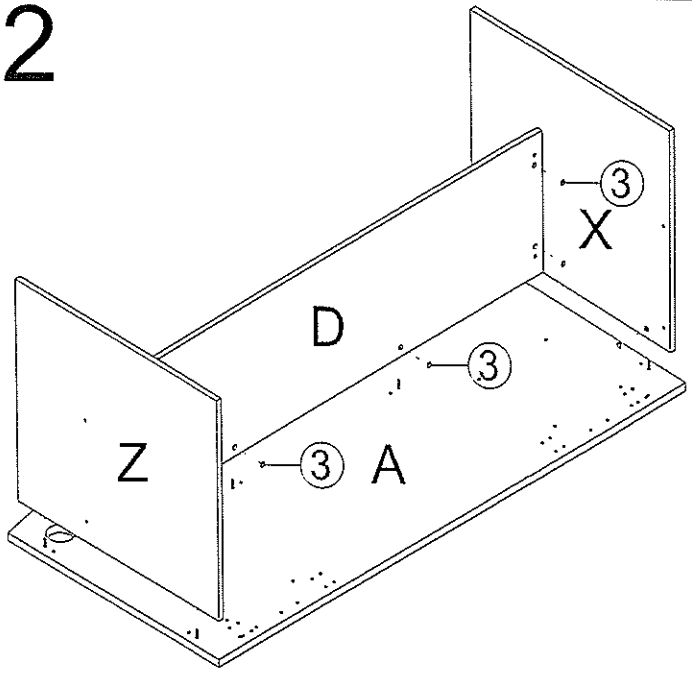
2