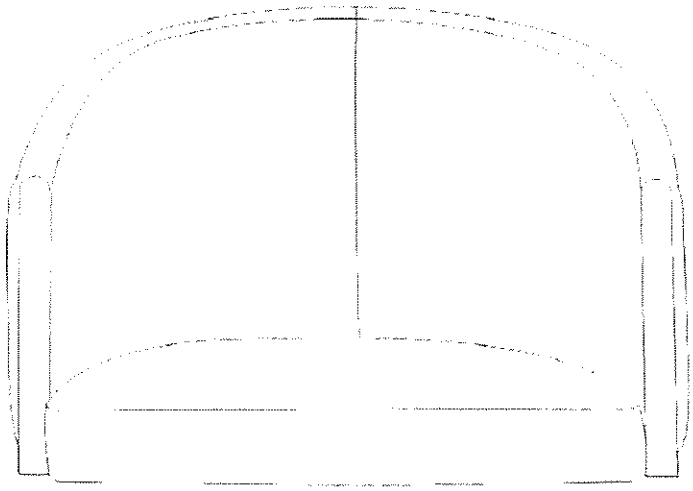

1

2

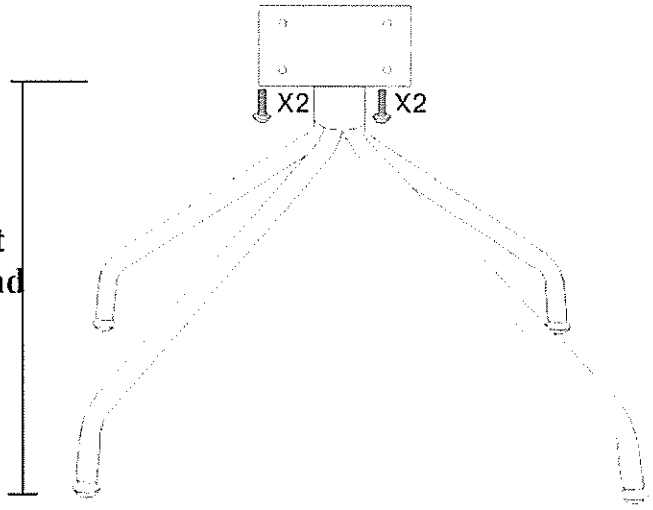

High in front
Low at behind
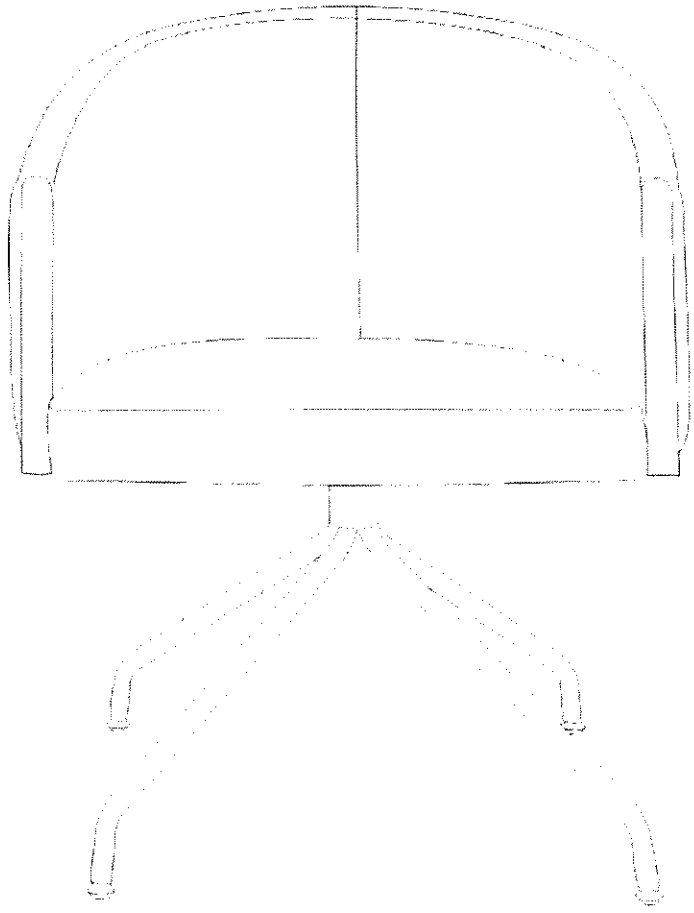
3